AK-141

AK-141 COMPONENTS

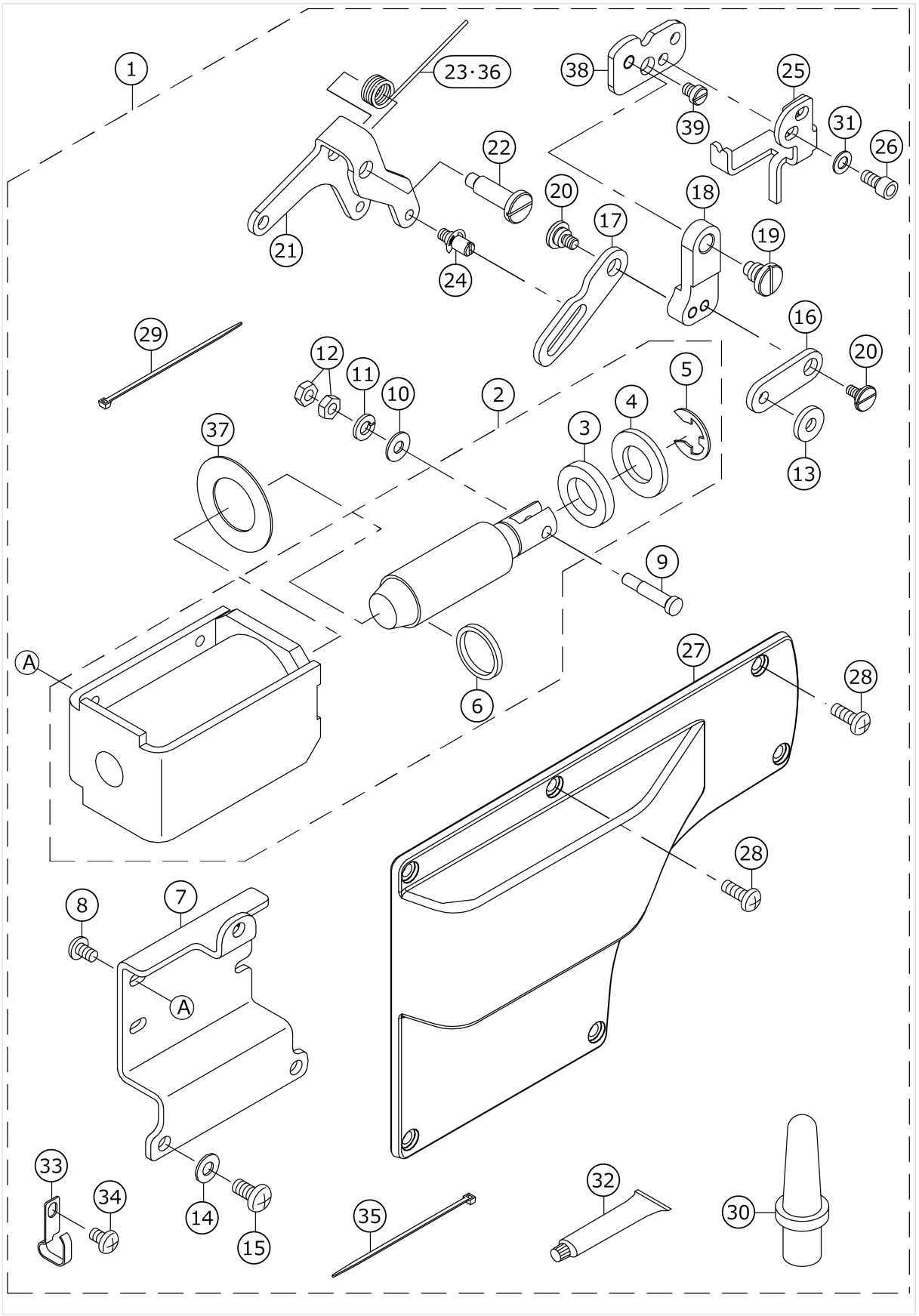

No.	品番	品名	備考	子部品	消耗品	個数
1	40089370	AK141 COMPONENTS				1.00
2	40086663	AK_SOLENOID		*		1.00
3	D2468555B00	RUBBER PLUNGER		*		1.00
4	40091295	AK SOLENOID WASHER		*		1.00
5	RE1200000K0	E-RING 12		*		1.00
6	B1652210D00	GASKET		*		1.00
7	40086662	AK_SOLENOID_BASE		*		1.00
8	SM4050855SP	SCREW M5 L=8		*		4.00
9	40086759	BACK_SOLENOID_PLUNGER_PIN		*		1.00
10	WP0551016SH	WASHER 5.5X13X1		*		1.00
11	WS0610002KN	SPRING WASHER 6.1X12.2X1.5		*		1.00
12	NM6050001SP	NUT M5		*		2.00
13	WP0612516SD	WASHER 6.1X15.2X2.5		*		1.00
14	WP0651056SD	WASHER 6.5X11X1		*		3.00
15	SM4061255SP	SCREW M6 L=12		*		3.00
16	40086665	SOLENOID_CONNECTING_LINK_PLATE		*		1.00
17	40086666	KNEE_LIFTER_LINK_PLATE		*		1.00
18	40142985	KNEE_LIFTER_CONNECTING_LINK		*		1.00
19	40145614	SHOULDER_SCREW		*		1.00
20	SD0800327TP	SHOULDER SCREW D=8 H=3.2		*		2.00
21	40086667	KNEE LIFTER LINK_AK		*		1.00
22	40082079	SHOULDER SCREW D=8 H=21.2		*		1.00
23	GAKA1842000	KNEE LIFTER LINK SPRING	TYPE H	*		1.00
24	GAK330400A0	SHAFT PIN ASM.		*		1.00
25	40086644	WIRE_HOLDER_AK		*		1.00
26	SM6051002TP	SCREW M5 L=10		*		2.00
27	40089270	SIDE_PLATE_AK		*		1.00
28	SM4051455SP	SCREW M5 L=14	FOR CP-18,CP-180(IP-110F CAN NOT BE USED. PLEASE USE THE ATTACHED SCREW.)	*		2.00
29	HX000430000	CLIP		*		1.00
30	40024081	HEAD SUPPORT ROD		*		1.00
31	WP0550800SP	WASHER 5.5X10X0.8		*		2.00
32	40006323	JUKI GREASE A TUBE		*		1.00
33	40022407	CORD HOLDER		*		1.00
34	SM4050855SP	SCREW M5 L=8		*		1.00
35	EA9500B0100	CABLE BAND		*		2.00
36	40098944	KNEE LIFTER LINK SPRING A	TYPE S/A	*		1.00
37	40131560	AK PLUNGER WASHER	TYPE S/A	*		1.00
38	40145613	FITTING BASE		*		1.00
39	40145940	BASE PLATE STOPPER		*		1.00

HOW TO MAKE USE OF THIS PARTS LIST

1.As to "#01" and "#02" refer to the "Note" given at the bottom of the respective pages.

2.Codes on the "Qty" column

・Each numeral indicates the number of parts required.

・"0.1" and "2.5" indicate the length (in meters) of the respective parts.

3.Parentheses mean that the corresponding part is a subpart that constructs an assembly part.

4.Dotted lines on the Figures indicate assembly parts.

１．リストページの＃０１、＃０２の印は、ページ下の”注記”の説明を参照下さい。

２．数量欄の数字は、個数を表し、０．１、２．５等の数値は、長さ（単位メートル）を表します。

３．数量欄の（　）は、組部品を構成している子部品であることを意味します。

４．イラストページの－－－－－枠は、組構成であることを意味します。